Treatment of Asymptomatic Hyperuricemia and Prevention of Vascular Disease: A Decision Analytic Approach

Roopa Akkineni, Stephanie Tapp, Anna N.A. Tosteson, Alexandra Lee, Katherine L. Miller, Hyon K. Choi, Yanyan Zhu, and Daniel A. Albert

ABSTRACT. ***Objective.*** Elevated serum urate may be associated with an increase in cardiovascular (CV) disease. Treating asymptomatic hyperuricemia with urate-lowering drugs such as allopurinol may reduce CV events. We designed a model to simulate the effect of allopurinol treatment on reducing frequency of CV events in individuals with elevated serum urate.

Methods. A Markov state-transition model was constructed to assess occurrence of vascular events (VE) for 2 treatment strategies: treat all asymptomatic individuals with allopurinol (Treat All) and treat only if symptomatic (Treat Symptomatic). The model simulated a hypothetical cohort of 50-year-old men with different serum urate concentrations (6–6.9 and 7–7.9 mg/dl) followed over 20 years. Age and sex subgroups were analyzed. Model inputs were derived from current literature. The main outcome measures were mean number of VE and mean number of deaths from VE.

Results. For 50-year-old men with serum urate 6.0–6.9 mg/dl, individuals in the Treat All strategy have a 30% reduction in the mean number of VE compared to those in the Treat Symptomatic strategy (mean VE: 0.078 vs 0.11), and a 39% reduction in mean number of deaths from VE. At higher serum urate concentrations, treatment is more effective in reducing the mean number of VE and mean number of deaths from VE (38% event, 54% death). Results for women show similar trends. As the cohort ages, treatment has less effect on reducing VE. The number needed to treat to prevent 1 event is 20 (men, 7.0–7.9 mg/dl).

Conclusion. The model predicts that treating asymptomatic hyperuricemia with allopurinol is most effective in preventing VE at a serum urate above 7.0 mg/dl in men and 5.0 mg/dl in women. (J Rheumatol First Release March 1 2014; doi:10.3899/jrheum.121231)

Key Indexing Terms:
HYPERURICEMIA CARDIOVASCULAR DISEASE DECISION ANALYSIS

From the Dartmouth-Hitchcock Medical Center, Rheumatology; Geisel School of Medicine at Dartmouth, The Dartmouth Institute for Health Policy and Clinical Practice, Lebanon, New Hampshire; Veterans Affairs, VA National Center for Patient Safety, White River Junction, New Hampshire; Northeastern Ohio Universities College of Medicine, Rootstown, Ohio; Boston University School of Medicine, Department of Medicine and Department of Clinical Epidemiology, Boston, Massachusetts, USA.

Supported in part by the US National Institute of Arthritis and Musculoskeletal and Skin Diseases, part of the US National Institutes of Health (NIH), under Award Number P60-AR062799. The content is solely the responsibility of the authors and does not necessarily represent the official views of the NIH.

R. Akkineni, MPH, Dartmouth-Hitchcock Medical Center, Rheumatology; S. Tapp, PhD, Geisel School of Medicine at Dartmouth, The Dartmouth Institute for Health Policy and Clinical Practice; A.N.A. Tosteson, ScD, The Dartmouth Institute for Health Policy and Clinical Practice; A. Lee, MS, Veterans Affairs, VA National Center for Patient Safety; K.L. Miller, MS, Northeastern Ohio Universities College of Medicine; H.K. Choi, MD, DrPH, Boston University School of Medicine, Department of Medicine; Y. Zhu, PhD, Boston University School of Medicine, Department of Clinical Epidemiology; D.A. Albert, MD, Dartmouth-Hitchcock Medical Center.

Address correspondence to Dr. D.A. Albert, Dartmouth-Hitchcock Medical Center, One Medical Center Drive, West Lebanon, New Hampshire 03756, USA. E-mail: Daniel.A.Albert@hitchcock.org

Accepted for publication December 13, 2013.

The end product of purine metabolism in humans is uric acid. Hyperuricemia is diagnosed at concentrations above its solubility in serum, which is 6.8 mg/dl[1]. Hyperuricemia is generally caused by decreased excretion of urate or increased production of urate or a combination of the 2 mechanisms, resulting in an increased risk of gout and nephrolithiasis[1]. In the early 1980s uric acid was removed from routine blood chemical screening panels because only a small portion of individuals with hyperuricemia developed symptoms, and treatment with allopurinol was associated with significant morbidity and mortality[2]. A recent study reported that 21.4% of US adults are hyperuricemic[3]; however, routine screening is not performed on asymptomatic individuals, nor are they recommended for urate-lowering therapy.

The link between elevated serum urate and cardiovascular (CV) diseases such as hypertension (HTN), coronary heart disease, peripheral vascular disease, and stroke was observed periodically over the years but has been largely ignored because of the absence of a causal mechanistic

explanation[4,5,6,7,8]. In adult patients with untreated HTN, 25% to 40% have hyperuricemia (> 6.8 mg/dl), and at higher serum urate levels, that percentage increases dramatically[9,10]. A metaanalysis concluded that hyperuricemia is associated with an increased risk for incident HTN where every 1 mg/dl increase in serum urate raised the risk for incident HTN by 13%[11]. Hyperuricemia is thought to be an independent risk factor for reduced survival among patients with heart failure and elevated risk of coronary heart disease and stroke[12,13,14]. Hence the management of hyperuricemia in its asymptomatic state would lead to a more comprehensive primary prevention strategy for coronary and cerebrovascular disease.

In our study, we designed and analyzed a Markov state-transition model to determine whether treatment of asymptomatic hyperuricemia with allopurinol compared to limited treatment only for symptomatic patients would reduce the risk of vascular events (VE) and consequent mortality over a 20-year period.

MATERIALS AND METHODS

We developed a decision model to capture the incidence and mortality from VE in persons with hyperuricemia. Our model compares 2 treatment options: treat all patients with allopurinol (Treat All) and treat with allopurinol only if a patient presents with symptoms of gout or nephrothiliasis (Treat Symptomatic). Each strategy arm contains a Markov model that tracks whether a patient has a VE and mortality that results from having had a VE (Figure 1). The model was analyzed by performing Monte Carlo microsimulations using TreeAge Pro 2013[15]. We performed 30 Monte Carlo microsimulations of 100,000 patients each to arrive at the average number of patients that have a VE and the average number of VE that result in death. Our base case analysis simulates 50-year-old males with asymp-

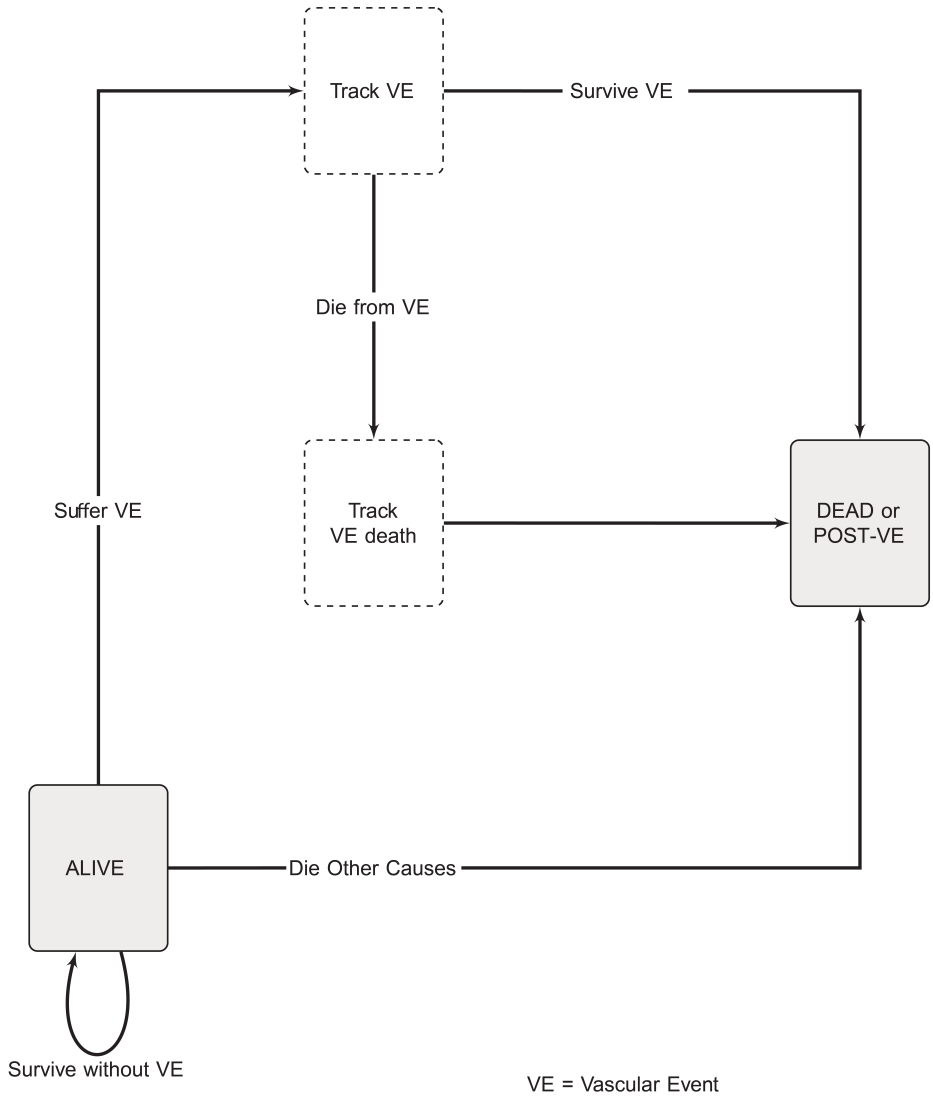

Figure 1. State-transition diagram of outcome for individuals with asymptomatic hyperuricemia. The shaded boxes represent the 2-state Markov model. As patients traverse the model, they may pass through the white boxes where events of interest are tracked. VE: vascular events.

tomatic hyperuricemia (defined as a serum urate concentration of 6.0–6.9 mg/dl) over 20 years. Other comorbidities such as renal impairment or metabolic syndrome were not addressed because of the complexity of those multiple conditions acting synergistically or being additive or antagonistic.

We defined a moderate serum urate group (6.0–6.9 mg/dl in men, 4.0–4.9 mg/dl in women) and a high serum urate group (7.0–7.9 mg/dl men, 5.0–5.9 mg/dl women). We performed additional microsimulations to explore the effects of changing the cutoff for hyperuricemia (from moderate to high) in 50-year-old males. We changed the start-age of the male patients (from 50 to 60 and 70) in the moderate serum urate concentration group. We also performed a similar analysis for women.

Treatment strategies. In the Treat All strategy, all individuals have hyperuricemia and receive allopurinol to reduce their serum urate level. During the first year of treatment, persons are at risk of experiencing an adverse drug reaction, which they may or may not survive. A patient who survives a drug reaction is no longer treated with allopurinol. The patient's serum urate level is assumed to remain elevated for the remainder of the simulation. This individual will go on to face increased risk of a VE and decreased survivability following a VE. For a patient who does not experience an adverse drug reaction, we assume that a therapeutic dosage that lowers serum urate to a level within the normal range will be achieved within the first year or the patient will discontinue allopurinol. Once a patient's serum urate has been lowered by allopurinol, we assume that the patient's serum urate levels will remain in the normal range for the remainder of the simulation. These patients go on to experience average risk for VE and average risk for VE death. When allopurinol fails to lower a patient's serum urate level within the first year, the patient is assumed to remain hyperuricemic for the remainder of the simulation. This individual will go on to face increased risk of suffering a VE and decreased survivability following a VE.

In the Treat Symptomatic strategy, individuals with hyperuricemia receive treatment only if they develop gout or nephrothiliasis. Upon receiving treatment, these individuals move through the model similarly to persons in the Treat All strategy. Those who do not develop gout are assumed to remain hyperuricemic. These patients will go on to face increased risk of a VE and decreased survivability following a VE.

Model assumptions. We assume that individuals with asymptomatic hyperuricemia reach a therapeutic dosage of allopurinol within the first year of receiving the drug and that the drug will continue to keep uric acid levels within a low range (< 6.0 mg/dl men, < 4.0 mg/dl women) in subsequent years[16]. If allopurinol fails to lower the individual's uric acid level within the first year, it is assumed that treatment has failed and the individual will remain hyperuricemic. Those who are sensitive to allopurinol are assumed to have a drug reaction within the first year of treatment[16]. If no drug reaction occurs within the first year, they are assumed to tolerate the drug over the entire course of treatment. Individuals in the Treat Symptomatic strategy who do not develop gout (and never receive treatment) are all assumed to remain hyperuricemic and face increased risk of a VE and decreased survivability following a VE.

Model inputs. Model inputs were estimated from published literature (Table 1). Age-specific mortality was derived from 2008 US life tables[17]. Probabilities of age-specific vascular events were derived from the US Framingham Heart Study and the US National Health and Nutrition Examination Survey (NHANES) cross-sectional study data[18,19,20,21,22,23]. The data for VE were split into 2 categories of increasing serum urate concentrations (moderate and high). The lack of data limited our analysis of higher serum urate concentrations in women. The incidence and mortality associated with VE in the referent group (< 6.0 mg/dl for men, < 4.0 mg/dl for women) were incorporated in the model for individuals who attain serum urate concentrations below the moderate and high range.

Probabilistic sensitivity analysis (PSA). To understand the effect of variable uncertainty on model results, we undertook PSA involving 10,000 samples, each consisting of 100,000 microsimulation trials of 50-year-old males (similarly females). Background mortality, probability of VE in the referent group, and probability of death from VE in the referent group were not varied. The probability of death from VE with increased serum urate was obtained by multiplying the probability of death from VE in the referent group by a relative risk sampled from a uniform distribution ranging from 1 to 2. The probability of suffering a VE at increased serum urate was obtained by multiplying the probability of suffering a VE in the referent group by a relative risk sampled from a uniform distribution ranging from 1 to 3. Other probabilities were varied according to distributions listed in Table 1.

Number needed to treat (NNT). A separate analysis examined an NNT to prevent CV and neurovascular events, which were calculated using model results for mean number of VE in the Treat All strategy compared to the Treat Symptomatic strategy.

RESULTS

For our base-case analysis, we used our model to simulate 20 years of data for 30 separate 100,000-person cohorts of 50-year-old males (Table 2). From these simulations, we calculated the mean number of VE and the mean number of deaths resulting from VE. The results indicate that treating all hyperuricemic patients with allopurinol (Treat All strategy) lowers the incidence of VE and mortality from VE in men with moderate serum urate levels compared to treating only individuals with gout or nephrolithiasis. The mean number of VE is lowest in the Treat All strategy (mean 0.078 events) compared to the Treat Symptomatic strategy (mean 0.11 events). The mean number of deaths from VE is also lowest in the Treat All strategy. Table 2 shows that individuals who receive treatment regardless of symptoms have a 30% reduction in VE compared to those who are treated only when symptoms occur. Treating men with moderate serum urate levels also leads to a 39% reduction in the mean number of deaths from VE compared to treating only when symptomatic.

Higher serum urate level. We performed an additional analysis for 50-year-old males with a higher cutoff for hyperuricemia (serum urate level increased from 6.0–6.9 mg/dl to 7–7.9 mg/dl). At this higher cutoff for hyperuricemia, treating all patients regardless of symptoms reduces the mean number of VE by 38% compared to treating only symptomatic patients (0.081 vs 0.13; Table 2). Additionally, treating all men with high serum urate levels leads to a 54% reduction in mean number of deaths from VE as compared to treating only symptomatic men.

Increasing starting age. We examined the effect of increasing the start age of the cohort from 50 years to 60 and 70 years. The Treat All strategy consistently reduces the mean number of VE, but the magnitude of the reduction decreases as the start age of the cohort increases. Mortality increases as members of the cohort age. Death acts as a competing risk, resulting in fewer VE. For example, in men with moderate serum urate levels, when the starting age of the cohort is increased from 50 to 70, the reduction in mean number of VE for the Treat All strategy compared to the Treat Symptomatic strategy falls from 30% to 15% (mean 0.125 vs 0.147; Table 2).

Table 1. Probability estimates used in the model.

Probability	Estimate							Distribution for PSA
		Referent group[a]		Moderate group[b]		High group[c]		
	Age	Female	Male	Female	Male	Female	Male	
Suffering a vascular event[d]	50-54	0.0027	0.00949	0.004	0.0214	0.0075	0.0297	Relative Risk sampled from Uniform $(1,3)$
	55-64	0.0074	0.02079	0.0087	0.0327	0.0122	0.041	
	65-74	0.0185	0.03399	0.0198	0.0459	0.0233	0.0542	
	75-84	0.0387	0.05859	0.04	0.0705	0.0435	0.0788	
	≥ 85	0.0637	0.07379	0.065	0.0857	0.0685	0.094	
Dying from vascular event[e]	50-54	0.00202	0.00458	0.00302	0.0058	0.00605	0.00814	Relative Risk sampled from Uniform $(1,2)$
	55-64	0.00248	0.00572	0.00348	0.00694	0.00651	0.00928	
	65-74	0.00372	0.008	0.00472	0.00922	0.00775	0.01156	
	≥ 75	0.00761	0.01326	0.00861	0.01448	0.01164	0.01682	
Reaction to allopurinol[f]		0.004						Uniform $(0,0.008)$
Dying from reaction to allopurinol (per reaction)[f]		0.25						Uniform $(0,0.5)$
Allopurinol success[f]		0.88						Uniform $(0.76,1)$
Dying from all causes		CDC Life Table[g]						N/A
Developing gout[h]		0.0080	moderate, male[b]					Uniform $(0,0.00356)$
		0.0178	high, male[c]					
		0.0008	moderate, female[b]					
		0.0025	high, female[c]					

[a]Women: < 4.0 mg/dl, Men: < 6.0 mg/dl
[b]Women: 4.0-4.9 mg/dl, Men: 6.0-6.9 mg/dl
[c]Women: 5.0-5.9 mg/dl, Men: 7.0-7.9 mg/dl
[d]Sources: 17,19,23
[e]Sources: 18,20
[f]Source: 15
[g]Source: 16
[h]Source: 21

PSA: probabilistic sensitivity analysis; CDC: US Centers for Disease Control; N/A: not applicable.

Analysis by sex. We used our model to simulate a cohort of hypothetical 50-year-old females. The data needed to estimate incidence and mortality for VE in women with hyperuricemia is weaker and not as readily available as the data for men. This is especially true for higher levels of serum urate. Women have a lower cutoff value for hyperuricemia usually defined as urate levels > 6.0 mg/dl. We examined women with serum urate 4.0–4.9 mg/dl (moderate) and 5.0–5.9 mg/dl (high). Results are shown in Table 2. At the lower levels of serum urate examined in this model, the results for women show trends similar to the results for men. Women appear to have a reduced effect from allopurinol treatment compared to men, but there is still an observed benefit from treatment even at the lower levels of serum urate. They also tend to experience fewer total number of events and deaths compared to men in both treatment strategies. In the highest serum urate group (5.0–5.9 mg/dl), treating all women with allopurinol leads to

Table 2. Mean number of vascular events and mean number of deaths from vascular event for men and women by serum urate concentration and age. Results based on 20-year followup.

	Age/Serum Urate Group		Mean Event (SD)	Mean Death (SD)	RR Event	RR Death
Men	50 years, Moderate[a]	Treat Symp	0.11034 (0.00082)	0.00016 (0.0000396)	Ref	Ref
		Treat All	0.07769 (0.00083)	0.00010 (0.0000300)	0.70	0.61
	50 years, High[b]	Treat Symp	0.13049 (0.00115)	0.00025 (0.0000565)	Ref	Ref
		Treat All	0.08131 (0.00101)	0.00012 (0.0000408)	0.62	0.46
	60 years, Moderate[a]	Treat Symp	0.1409 (0.00097)	0.00028 (0.00005)	Ref	Ref
		Treat All	0.1126 (0.00103)	0.00022 (0.00004)	0.76	0.79
	70 years, Moderate[a]	Treat Symp	0.1472 (0.00079)	0.00039 (0.00005)	Ref	Ref
		Treat All	0.1254 (0.00118)	0.00031 (0.00005)	0.85	0.79
Women	50 years, Moderate[c]	Treat Symp	0.03736 (0.0006)	0.000025 (0.0000138)	Ref	Ref
		Treat All	0.03336 (0.00057)	0.000022 (0.0000114)	0.89	0.88
	50 years, High [d]	Treat Symp	0.04967 (0.00076)	0.000062 (0.0000217)	Ref	Ref
		Treat All	0.03473 (0.00048)	0.000025 (0.0000165)	0.70	0.41
	60 years, Moderate[b]	Treat Symp	0.0714 (0.00103)	0.00009 (0.00002)	Ref	Ref
		Treat All	0.0673 (0.00085)	0.00008 (0.00002)	0.94	0.89
	70 years, Moderate [b]	Treat Symp	0.1008 (0.00077)	0.00016 (0.00004)	Ref	Ref
		Treat All	0.0980 (0.00080)	0.00013 (0.00004)	0.97	0.81

SD: standard deviation, RR: relative risk, Ref: Referent group, Symp: Symptomatic, Event: vascular event, Death: death from vascular event

[a] 6.0 -6.9 mg/dl
[b] 7.0-7.9 mg/dl
[c] 4.0-4.9 mg/dl
[d] 5.0-5.9 mg/dl

a 30% and 59% reduction in the mean number of VE and mean number of deaths from VE compared to treating women only when symptomatic.

Sensitivity analyses. We performed several 1-way sensitivity analyses to evaluate the effects of variability on the mean number of VE for the Treat All strategy compared to the Treat Symptomatic strategy. The Treat All strategy always produces fewer VE than the Treat Symptomatic strategy unless one of the following occurs: (1) the probability of developing gout is 100% (Figure 2); (2) the probability that allopurinol successfully lowers serum urate is 0 (Figure 3); or (3) the probability of vascular event at a high/moderate level of serum urate is equal to the probability of vascular event at the referent serum urate level (Figure 4). The model was not sensitive to changes in the probability of reaction to allopurinol (Figure 5).

In the probabilistic sensitivity analysis, the Treat All strategy always produced fewer VE than the Treat Symptomatic strategy. For men, the mean number of VE in the Treat All strategy was 0.081 versus 0.141 in the Treat Symptomatic strategy (RR 0.57). Results were similar for women and are summarized in Table 3.

The NNT statistic was calculated for allopurinol stratified by serum urate levels and sex for outcomes of heart disease incidence over a 20-year period (Table 4). The numbers ranged from 20 men with 7.0–7.9 mg/dl serum urate receiving treatment to avoid 1 incidence of heart attack to 67 women at 5.0–5.9 mg/dl serum urate receiving treatment to avoid the same.

DISCUSSION

Based on our results, treating all patients with asymptomatic hyperuricemia (at urate concentrations above 6.0 mg/dl in men and above 4.0 mg/dl in women) with allopurinol has

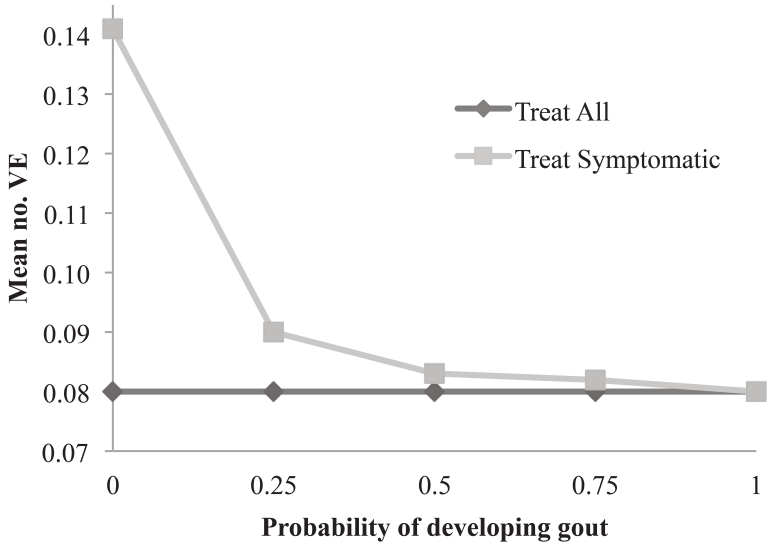

Figure 2. Results of sensitivity analysis performed on the model for men with serum urate level of 6.0-6.9 mg/dl. The graph shows the probability of developing gout. The Treat All strategy is preferred to the Treat Symptomatic strategy as long as the probability of developing gout is < 1. VE: vascular events.

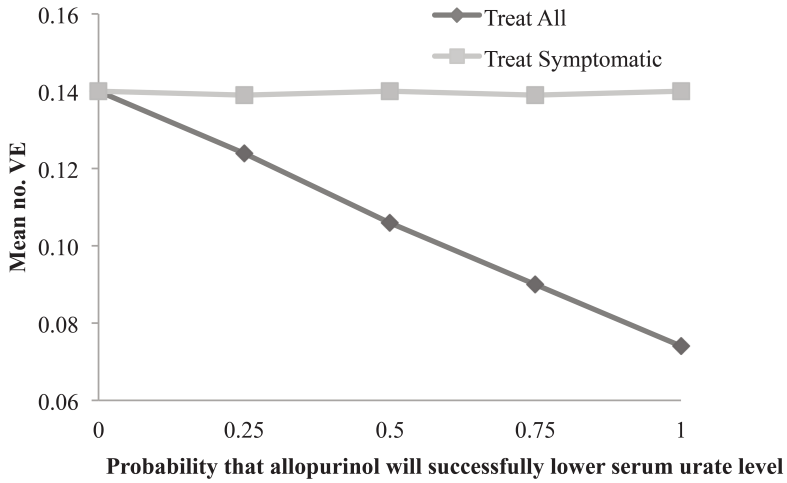

Figure 3. Results of sensitivity analysis performed on the model for men with serum urate level of 6.0-6.9 mg/dl. The graph shows the probability that allopurinol will be successful in lowering serum urate. The Treat All strategy is preferred to the Treat Symptomatic strategy as long as the probability of allopurinol success is > 0. VE: vascular events.

the potential to reduce the incidence and mortality associated with VE. When the cutoff for hyperuricemia in men is increased to ≥ 7.0 mg/dl, then an even greater reduction in VE is achieved. The analysis in women was limited by a lack of data available for higher serum urate concentrations. It would be reasonable to assume, based on the model trends, that women with very high levels of serum urate would observe increased benefit from allopurinol therapy for asymptomatic hyperuricemia. The risk of VE is thought to increase continuously on a linear scale. This is the reason we observe benefit in treating patients with allopurinol therapy, even at serum urate levels lower than the defined hyperuricemia cutoff in both men and women.

The increased risk of CV disease observed in the Western populations appears to correlate with increased urate levels. Hyperuricemia appears to precede the development of HTN, which indicates that it is not simply a result of HTN[7]. Many studies concur that hyperuricemia has a strong effect on HTN development within 5 years, independent of the other risk factors involved[24,25,26,27,28,29]. Data from a trial

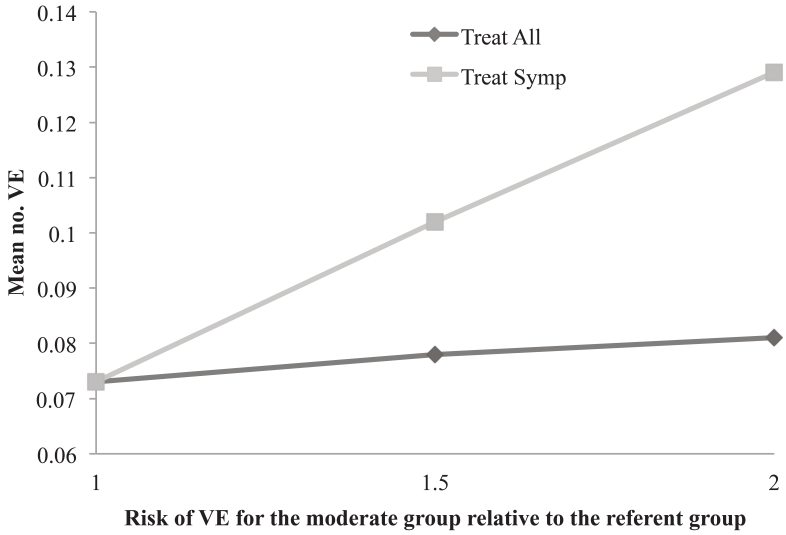

Figure 4. Risk of a vascular event (VE) in men with serum urate level of 7.0-7.9 mg/dl compared to serum urate level < 6.0 mg/dl. The Treat All strategy is preferred to the Treat Symptomatic strategy as long as the risk of vascular event in the high group is greater than the risk of vascular event in the referent group.

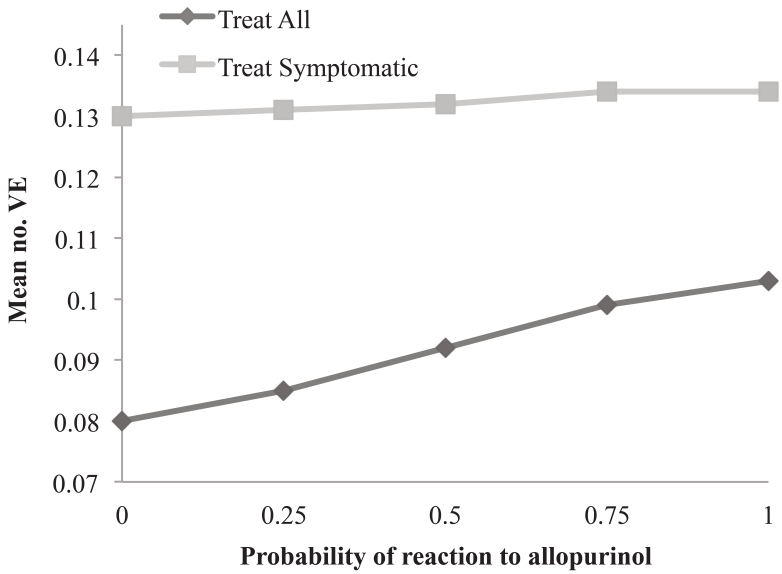

Figure 5. Probability of reaction to allopurinol: The Treat All strategy is preferred to the Treat Symptomatic strategy for any probability of drug reaction.

involving 30 adolescents with hyperuricemia and HTN is suggestive of a relationship between uric acid and early-onset primary HTN. For patients undergoing allopurinol therapy, blood pressure became normal in 86% of the participants, who dropped serum urate levels to < 5 mg/dl, as compared with 3% among the ones receiving placebo[30]. These results showed allopurinol to be as effective as most conventional antihypertensive agents[30].

Results from the Rotterdam study, Multiple Risk Factors Intervention Trial, and various studies revealed that both hyperuricemia and gout were independent risk factors for myocardial infarction and that individuals with high serum urate levels had increased risk of stroke, CV disease, fatal coronary heart disease, and nonfatal myocardial infarction[31,32,33]. Metaanalyses suggested that elevated serum urate irrespective of symptoms might increase the morbidity and mortality from coronary heart disease and stroke compared to normouricemic individuals[12,13]. In line with

Table 3. Results of probabilistic sensitivity analysis. Relative risk of vascular event (VE) for the moderate group compared to the referent group, relative risk of death from VE for the moderate group compared to the referent group, probability of adverse drug reaction, probability that drug reaction results in death, probability of drug success, and the probability of developing gout were sampled from distributions listed in Table 1. The probabilities for a VE or dying from a VE in the referent group were not varied, nor was the probability of death from causes other than a VE.

	Age/Serum Urate Group		Mean Event (SD)	Mean Death (SD)	RR Event	RR Death
Men	50 years, Moderate[a]	Treat Symp	0.141 (0.036)	0.00027 (0.001)	Ref	Ref
		Treat All	0.081 (0.007)	0.00012 (0.00004)	0.57	0.44
Women	50 years, Moderate[b]	Treat Symp	0.064 (0.0172)	0.00006 (0.000031)	Ref	Ref
		Treat All	0.037 (0.0034)	0.000025 (0.000016)	0.58	0.52

SD: standard deviation, RR: relative risk, Ref: Referent group, Symp: Symptomatic, Event: vascular event, Death: death from vascular event

[a] 6.0 -6.9 mg/dl [b] 4.0-4.9 mg/dl

Table 4. Number needed to treat (NNT) for allopurinol to prevent incidence of 1 vascular event (VE) and sample size estimates for trial using allopurinol to prevent incidence of VE. Results based on 20-year followup.

	Age/Serum Urate Group	NNT
Men	50 yrs old, moderate[a]	31
	50 yrs old, high[b]	20
Women	50 yrs old, moderate[c]	250
	50 yrs old, high[d]	67

[a] 6.0–6.9 mg/dl. [b] 7.0–7.9 mg/dl. [c] 4.0–4.9 mg/dl. [d] 5.0–5.9 mg/dl.

these conclusions, our analysis suggests that treatment with allopurinol might be beneficial for individuals with high serum urate concentrations.

Benefits compared to statin interventions. Hyperuricemia is often embedded in a matrix of CV risk factors commonly referred to as the metabolic syndrome. Parsing out the relationship of hyperuricemia to the increased VE rate is a difficult epidemiologic problem. A clinical trial using allopurinol may shed light on these relationships and specifically address the issue of whether hyperuricemia apart from HTN and renal insufficiency leads to vascular disease. Research suggests that hyperuricemia has a strong association with peripheral, carotid, and coronary vascular disease, stroke development, and vascular dementia[3,31,34,35,36]. Some of the benefits reported for drugs such as losartan and atorvastatin have been attributed to lowering urate levels[7,37,38]. Statin therapy, which is generally acknowledged to be effective in reducing CV disease morbidity, provides similar benefits. The data from the Cochrane review, which looked at the evidence for statins for primary prevention, found that total mortality had a relative risk reduction of 17%; the risk of heart attacks was reduced by 28%[39]. In low-risk patients, 60 people have to take a statin for 5 years for 1 to avoid a heart attack[40]. Our analysis suggests that treating asymptomatic hyperuricemia provides comparable benefits. The NNT figures for allopurinol appear similar to statin therapy, where the NNT for low-risk individuals for heart disease with high serum urate range from 20–69 persons followed over 20 years (Table 4).

Study limitations. To our knowledge, this is the first model to compare treatment strategies in managing asymptomatic hyperuricemia to prevent longterm CV and neurovascular morbidity and mortality. The estimates used in our model and those used to generate the NNT are based on available cross-sectional observational data and consequently any associations of causality cannot be assumed. Secondary data analysis has some pitfalls. Data from NHANES and the Framingham Heart Study on the morbidity and mortality from VE for the different serum urate concentrations are inconsistent. Our model includes data from both of these large studies and hence is subject to a possible neutralization effect of the results. Given that our study was an exercise in

microsimulation modeling, we do not expect our results to be used as guidelines for clinical practice; however, they could be used to design a clinical trial.

Although it would be interesting to analyze the number of VE and deaths at very high levels of serum urate concentrations, inadequate data on patients at risk for coronary and neurovascular comorbidities beyond serum urate of 8.0 mg/dl in men and 6.0 mg/dl in women limited the analysis.

In the clinical setting, if patients respond poorly to allopurinol treatment, then they try other urate-lowering drugs until symptoms are resolved. Alternative therapies for asymptomatic hyperuricemia have not been modeled because of the complexity of scenarios. In our model it is assumed that those who fail allopurinol treatment show no effect past the maximum therapeutic dose. In individuals who switch to alternative therapies, the treatment of hyperuricemia would be more effective and the observed longterm benefit would be larger.

Since the removal of serum urate screening from routine blood chemical panels, testing for asymptomatic hyperuricemia is solely at the healthcare provider's discretion, and most providers generally refrain from treating patients with serum urate levels above 7.0 mg/dl if they do not exhibit any gout or kidney stones. However, prevalence of gout and hyperuricemia has been increasing in the past few years. In men 65–75 years old, prevalence of gout and hyperuricemia increased from 36 cases per 1000 in 1990 to 45 cases per 1000 in 1999, and this increase was doubled for men over 75 years[41]. Given the upward trend in the prevalence of gout and hyperuricemia along with the likely association between high serum urate and CV disease risk, it might be beneficial to treat patients with serum urate levels above 7.0 mg/dl regardless of symptoms. Routine screening of serum urate followed by appropriate management of hyperuricemia might be an effective approach in preventing longterm VE associated with high serum urate concentrations.

ACKNOWLEDGMENT

We thank Seo Young Kim, MD, for offering helpful advice for our study.

REFERENCES

1. Wilcox WR, Khalaf A, Weinberger A, Kippen I, Klinenberg JR. Solubility of uric acid and monosodium urate. Med Biol Eng 1972;10:522-31.
2. Feig DI, Mazzali M, Kang DH, Nakagawa T, Price K, Kannelis J, et al. Serum uric acid: a risk factor and a target for treatment? J Am Soc Nephrol 2006;4 Suppl 2:S69-73.
3. Zhu Y, Pandya BJ, Choi HK. Prevalence of gout and hyperuricemia in the US general population: The National Health and Nutrition Examination Survey 2007-2008. Arthritis Rheum 2011;63:3136-41.
4. Baker JF, Krishnan E, Chen L, Schumacher HR. Serum uric acid and cardiovascular disease: recent developments, and where do they leave us? Am J Med 2005;118:816-26.
5. Baker JF, Schumacher HR, Krishnan E. Serum uric acid level and risk for peripheral arterial disease: analysis of data from the multiple risk factor intervention trial. Angiology 2007;58:450-7.
6. Brand FN, McGee DL, Kannel WB, Stokes J 3rd, Castelli WP. Hyperuricemia as a risk factor of coronary heart disease: The Framingham Study. Am J Epidemiol 1985;121:11-8.
7. Kim SY, De Vera MA, Choi HK. Gout and mortality. Clin Exp Rheumatol 2008;5 Suppl 51:S115-9.
8. Feig DI, Kang DH, Johnson RJ. Uric acid and cardiovascular risk. N Engl J Med 2008;359:1811-21.
9. Cannon PJ, Stason WB, Demartini FE, Sommers SC, Laragh JH. Hyperuricemia in primary and renal hypertension. N Engl J Med 1966;275:457-64.
10. Kinsey D, Walther R, Sise HS, Whitelaw GP, Smithwick RH. Incidence of hyperuricaemia in 400 hypertensive subjects. Circulation 1961;24:972-3.
11. Grayson PC, Kim SY, LaValley M, Choi HK. Hyperuricemia and incident hypertension: a systematic review and meta-analysis. Arthritis Care Res 2011;63:102-10.
12. Thanassoulis G, Brophy JM, Richard H, Pilote L. Gout, allopurinol use, and heart failure outcomes. Arch Intern Med 2010;170:1358-64.
13. Kim SY, Guevara JP, Kim KM, Choi HK, Heitjan DF, Albert DA. Hyperuricemia and risk of stroke: a systematic review and meta-analysis. Arthritis Rheum 2009;61:885-92.
14. Kim SY, Guevara JP, Kim KM, Choi HK, Heitjan DF, Albert DA. Hyperuricemia and coronary heart disease: a systematic review and meta-analysis. Arthritis Care Res 2010;62:170-80.
15. TreeAge Pro 2013 Suite. 1.0.2 ed: TreeAge Software Inc.; 2013.
16. Stamp LK, O'Donnell JL, Zhang M, James J, Frampton C, Barclay ML, et al. Using allopurinol above the dose based on creatinine clearance is effective and safe in patients with chronic gout, including those with renal impairment. Arthritis Rheum 2011;63:412-21.
17. Arias E. United States life tables, 2008. Natl Vital Stat Rep 2012;61:1-64.
18. Go AS, Mozaffarian D, Roger VL, Benjamin EJ, Berry JD, Borden WB, et al. AHA Statistical Update. Heart disease and stroke statistics-2013 update. Circulation 2013;127:e6-e245.
19. Fang J, Alderman MH. Serum uric acid and cardiovascular mortality – The NHANES I epidemiologic follow-up study 1971-1992. JAMA 2000;283:2404-10.
20. Culleton BF, Larson MG, Kannel WB, Levy D. Serum uric acid and risk for cardiovascular disease and death: the Framingham Heart Study. Ann Intern Med 1999;131:7-13.
21. Shurin SB. Morbidity and mortality: 2012 chart book on cardiovascular, lung, and blood diseases. US National Institutes of Health: National Heart, Lung, and Blood Institute. 2012. [Internet. Accessed January 13, 2014.] Available from: www.nhlbi.nih.gov/resources/docs/2012_ChartBook_508.pdf
22. Bhole V, Vera M, Rahman MM, Krishnan E, Choi H. Epidemiology of gout in women. Arthritis Rheum 2010;62:1069-76.
23. Zhu Y, Pandya B, Choi H. Higher serum urate levels correlate with increased prevalence of comorbidities in the US general population: NHANES 1999-2008. Arthritis Rheum 2010;62 Suppl 10:S642.
24. Alper AB Jr., Chen W, Yau L, Srinivasan SR, Berenson GS, Hamm LL. Childhood uric acid predicts adult blood pressure: the Bogalusa Heart Study. Hypertension 2005;45:34-8.
25. Dyer AR, Liu K, Walsh M, Kiefe C, Jacobs DR Jr., Bild DE. Ten-year incidence of elevated blood pressure and its predictors: the CARDIA study. Coronary Artery Risk Development in (Young) Adults. J Hum Hypertens 1999;13:13-21.
26. Forman JP, Choi H, Curhan GC. Plasma uric acid level and risk for incident hypertension among men. J Am Soc Nephrol 2007; 18:287-92.
27. Krishnan E, Kwoh CK, Schumacher HR, Kuller L. Hyperuricemia and incidence of hypertension among men without metabolic syndrome. Hypertension 2007;49:298-303.
28. Perlstein TS, Gumieniak O, Williams GH, Sparrow D, Vokonas PS,

Gaziano M, et al. Uric acid and the development of hypertension: the normative aging study. Hypertension 2006;48:1031-6.
29. Shankar A, Klein R, Klein BE, Nieto FJ. The association between serum uric acid level and long-term incidence of hypertension: Population-based cohort study. J Hum Hypertens 2006;20:937-45.
30. Feig DI, Soletsky B, Johnson RJ. Effect of allopurinol on blood pressure of adolescents with newly diagnosed essential hypertension: a randomized trial. JAMA 2008;300:924-32.
31. Bos MJ, Koudstaal PJ, Hofman A, Witteman JC, Breteler MM. Uric acid is a risk factor for myocardial infarction and stroke: the Rotterdam study. Stroke 2006;37:1503-7.
32. Krishnan E, Baker JF, Furst DE, Schumacher HR. Gout and the risk of acute myocardial infarction. Arthritis Rheum 2006;54:2688-96.
33. Choi HK, Curhan G. Independent impact of gout on mortality and risk for coronary heart disease. Circulation 2007;116:894-900.
34. Schretlen DJ, Inscore AB, Vannorsdall TD, Kraut M, Pearlson GD, Gordon B, et al. Serum uric acid and brain ischemia in normal elderly adults. Neurology 2007;69:1418-23.
35. Moriarity JT, Folsom AR, Iribarren C, Nieto FJ, Rosamond WD. Serum uric acid and risk of coronary heart disease: Atherosclerosis Risk in Communities (ARIC) Study. Ann Epidemiol 2000; 10:136-43.
36. Wannamethee SG, Shaper AG, Whincup PH. Serum urate and the risk of major coronary heart disease events. Heart 1997;78:147-53.
37. Stamp LK, Chapman PT. Gout and its comorbidities: implications for therapy. Rheumatology 2013;52:34-44.
38. Athyros VG, Elisaf M, Papageorgiou AA, Symeonidis AN, Pehlivanidis AN, Bouloukos VI, et al. Effect of statins versus untreated dyslipidemia on serum uric acid levels in patients with coronary heart disease: a subgroup analysis of the GREek Atorvastatin and Coronary-heart-disease Evaluation (GREACE) study. Am J Kidney Dis 2004;43:589-99.
39. Mayor S. Cochrane review questions evidence for statins for primary prevention in low risk groups. BMJ 2011;342:d480.
40. Newman D. Statin drugs given for 5 years for heart disease prevention (without known heart disease). [Internet. Accessed January 13, 2014.] Available from: www.thennt.com/nnt/statins-for-heart-disease-prevention-without-prior-heart-disease/
41. Wallace KL, Riedel AA, Joseph-Ridge N, Wortmann R. Increasing prevalence of gout and hyperuricemia over 10 years among older adults in a managed care population. J Rheumatol 2004;31:1582-7.